DRC
PZ24-12000008
09/03/2025

ALL ELEVATIONS ARE REFERENCED TO NAVD88 VERTICAL DATUM

GENERAL CONDITION NOTES :

1. THE LOCATION OF EXISTING UTILITIES AND TOPOGRAPHY HAS BEEN PREPARED FROM THE MOST RELIABLE INFORMATION AVAILABLE TO THE ENGINEER. THIS INFORMATION IS NOT GUARANTEED AND IT IS THE RESPONSIBILITY OF THE CONTRACTOR TO DETER-MINE THE EXACT LOCATION OF ALL EXISTING UTILITIES AND TOPOGRAPHY PRIOR TO CONSTRUCTION.
2. PRIOR TO CONSTRUCTION THE CONTRACTOR IS TO NOTIFY THE FOLLOWING COMPANIES & AGENCIES AND ANY OTHERS SERVING THE AREA:

FLORIDA POWER & LIGHT CO., CONSTRUCTION
BELLSOUTH
COMCAST
TECO
LOCAL CITY / COUNTY ENGINEERING & UTILITY DEPARTMENTS
FLORIDA DEPARTMENT OF TRANSPORTATION (FDOT), AS APPLICABLE
UNDERGROUND UTILITIES NOIFICATION CENTER OF FLORIDA
(S.U.N.S.H.I.N.E.)

PAVING, GRADING & DRAINAGE NOTES:

1. ALL UNSUITABLE MATERIALS, SUCH AS MUCK, HARDPAN, ORGANIC MATERIAL & OTHER DELETERIOUS MATERIAL AS CLASSIFIED BY AASHTO M-145, FOUND WITHIN THE ROAD & PARKING LOT AREAS SHALL BE REMOVED DOWN TO ROCK OR SUITABLE MATERIAL, & REPLACED W/ THE SPECIFIED FILL MATERIAL IN MAXIMUM 12" LIFTS COMPACTED TO NOT LESS THAN 100% MAXIMUM DRY DENSITY AT OPTIMUM MOISTURE IN ACCORDANCE W/ AASHTO T-99. THICKNESS OF LAYERS MAY BE INCREASED PROVIDED THE EQUIPMENT & METHODS USED ARE PROVEN BY FIELD DENSITY TESTING TO BE CAPABLE OF COMPACTING THICK LAYERS TO SPECIFIED DENSITIES.
2. ALL AREAS SHALL BE CLEARED & GRUBBED PRIOR TO CONSTRUCTION. THIS SHALL CONSIST OF THE COMPLETE REMOVAL & DISPOSAL OF ALL TREES, BRUSH, STUMPS, ROOTS, GRASS, WEEDS, RUBBISH & ALL OTHER OBSTRUCTION RESTING ON OR PROTRUDING THROUGH THE SURFACE OF THE EXIST. GROUND TO A DEPTH OF 12". ITEMS DESIGNATED TO REMAIN OR TO BE RELOCATED OR ADJUSTED SHALL BE SO DESIGNATED ON THE DWGS.
3. FILL MATERIAL SHALL BE CLASSIFIED AS A-1, A-3 OR A-2.4 IN ACCORDANCE W/ AASHTO M-145 & SHALL BE FREE FROM VEGETATION & ORGANIC MATERIAL. NOT MORE THAN 12% BY WEIGHT OF FILL MATERIAL SHALL PASS THE NO. 200 SIEVE.
4. THE CONTRACTOR SHALL BE RESPONSIBLE FOR PROVIDING CERTIFIED MATERIAL TEST RESULTS TO THE ENGINEER OF RECORD PRIOR TO THE RELEASE OF FINAL CERTIFICATION BY THE ENG. TEST RESULTS MUST INCLUDE BUT MAY NOT BE LIMITED TO, DENSITIES FOR SUBGRADE & LIME ROCK, UTILITIES, EXCAVATION, ASPHALT GRADIATION REPORTS, CONC. CYLINDERS, ETC...
5. ALL INLETS & PIPE SHALL BE PROTECTED DURING CONSTRUCTION TO PREVENT SILTATION IN THE DRAINAGE SYSTEMS BY WAY OF TEMPORARY PLUGS & PLYWOOD OR PLASTIC COVERS OVER THE INLETS. THE ENTIRE DRAINAGE SYSTEM TO BE CLEAN OF DEBRIS PRIOR TO FINAL ACCEPTANCE.
6. WHERE NEW ASPHALT MEETS OR ABUTS EXIST. ASPHALT, THE EXIST. ASPHALT SHALL BE SAWCUT TO PROVIDE A STRAIGHT EVEN LINE. PRIOR TO REMOVING CURB OR GUTTER, THE ADJACENT ASPHALT SHALL ALSO BE SAWCUT TO PROVIDE A STRAIGHT EVEN LINE.
7. ALL PROPOSED GRADES (ELEVATIONS) REFER TO ASPHALT GRADES UNLESS INDICATED OTHERWISE.
8. SITE GRADING SHALL BE W/IN 0.1' OF THE REQUIRED ELEVATION & ALL AREAS SHALL BE GRADED TO DRAIN.
9. ALL SUBGRADE SHALL HAVE AN LBR OF 40 UNLESS OTHERWISE NOTED & SHALL BE COMPACTED TO 98% MAXIMUM DRY DENSITY PER AASHTO T-99.
10. ALL LIMEROCK SHALL BE COMPACTED TO 98% PER AASHTO T-180 & HAVE NOT LESS THAN 60% OF CARBONATES OF CALCIUM & MAGNESIUM UNLESS OTHERWISE DESIGNATED. ALL LIMEROCK SHALL BE PRIMED.
11. CONCRETE & ASPHALT THICKNESS SHALL BE OF TYPE DESIGNATED ON DWGS. (SEE SECTIONS)
12. PLASTIC FILTER FABRIC SHALL BE MIRAFI, TYPAR OR EQUAL CONFORMING TO SECTION 985 OF THE FDOT STANDARD SPECIFICATIONS.
13. CONC. SIDEWALKS SHALL BE 4" THICK ON COMPACTED SUBGRADE, W/ 1/2" EXPANSION JOINTS PLACED AT A MAXIMUM OF 75'. CRACK CONTROL JOINTS SHALL BE 5' ON CENTER. THE BACK OF SIDEWALK ELEVATION SHALL EQUAL THE CROWN OF ROADWAY, UNLESS SPECIFIED OTHERWISE BY LOCAL CODES OR INDICATED ON DWGS. ALL CONC. SIDEWALKS THAT CROSS DRIVEWAYS SHALL BE 6" THICK.
14. PIPE SPECIFICATIONS : THE MATERIAL TYPE IS SHOWN ON THE DRAWINGS BY ONE OF THE FOLLOWING DESIGNATIONS -

RCP = REINFORCED CONC. PIPE, ASTM DESIGNATION C-76, TABLE III
CMP = CORRUGATED METAL (ALUM.) PIPE, TM DESIGNATION M-196
CMP = (SMOOTH LINED) CORRUGATED METAL (ALUM.) PIPE, ASTM DESIGNATION M-196
SCP = SLOTTED CONC. PIPE, FDOT SECTIONS 941 & 942
PVC = POLYVINYLCHLORIDE PIPE
PCMP = PERFORATED CMP, FDOT SECTION 945
DIP = DUCTILE IRON PIPE
HDPE = HIGH DENSITY POLYETHYLENE PIPE.

15. ASPHALT -

BITUMINOUS MATERIAL SHALL BE ASPHALT CEMENT, VISCOSITY GRADE AC-20, CONFORMING TO THE REQUIREMENTS OF FDOT STANDARD SPECIFICATIONS, 1986 EDITION, SECTION 916-1.

PRIME COAT SHALL BE CUT BACK ASPHALT, GRADE RC-70 OR RC-250 CONFORMING TO THE REQUIREMENTS SPECIFIED IN AASHTO DESIGNATION M-81-75 (1982). RATE - 0.10 GALS./S.Y. TACK COAT SHALL BE EMULSIFIED ASPHALT, GRADE RS-2 CONFORMING TO THE REQUIREMENTS SPECIFIED IN AASHTO DESIGNATION M-140-82. RATE - 0.02 TO 0.08 GALS/S.Y.

DESIGN MIX SHALL CONFORM TO FDOT SECTION 331 UNLESS OTHERWISE SPECIFIED.

PAVEMENT MARKING & SIGNING STANDARD NOTES :

1. STOP SIGNS SHALL BE 30"x30" (R1-1), HIGH INTENSITY.
2. ALL SIGNS SHALL BE PLACED AT A HEIGHT NOT LESS THAN 5' & NOT GREATER THAN 7', THE HEIGHT IS MEASURED FROM THE BOTTOM OF THE SIGN TO THE EDGE OF NEAREST PAVEMENT. THE SIGN POST SHALL BE PLACED A MINIMUM OF 6' TO A MAXIMUM OF 12' FROM THE ADJACENT PAVEMENT, & A MINIMUM OF 6' FROM THE CROSS TRAFFIC PAVEMENT.
3. STOP BARS SHALL BE 24" WHITE.
4. ALL SITE PAVEMENT MARKINGS SHALL BE PAINT. (UNLESS INDICATED OTHERWISE)
5. ALL PAVEMENT MARKINGS AND SIGNAGE IN THE ROAD RIGHT-OF-WAY SHALL BE THERMOPLASTIC & SHALL CONFORM TO MUTCD AND PBC TYPICAL T-P-06-001.

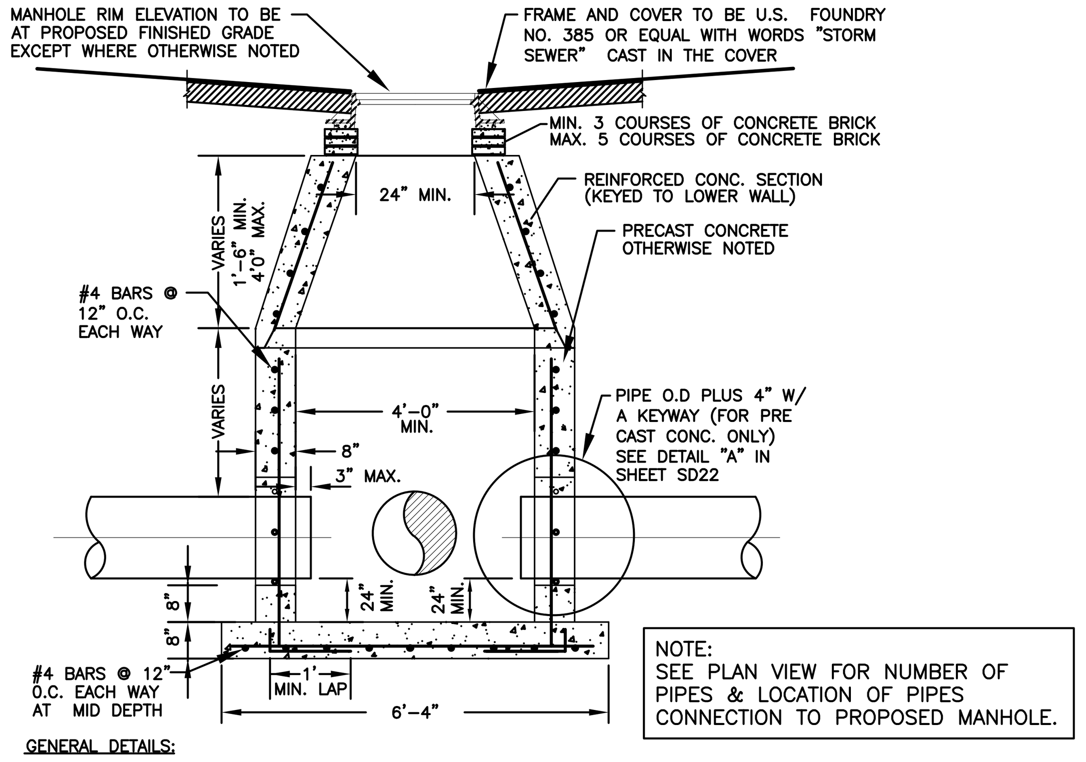

NOTE:
SEE PLAN VIEW FOR NUMBER OF PIPES & LOCATION OF PIPES CONNECTION TO PROPOSED MANHOLE.

GENERAL DETAILS:
1. PROVIDE SHOP DRAWINGS OF STRUCTURES.
2. PRECAST CONCRETE MANHOLES SHALL CONFORM TO ASTM C478, SHALL BE TYPE II ACID RESISTANT CEMENT AND SHALL MAINTAIN A MINIMUM COMPRESSIVE STRENGTH OF 4000 PSI IN 28 DAYS.
3. REFER TO FODT INDEX 200 FOR ADDITIONAL DETAILS AND SPECIFICATIONS.
4. ALL REINFORCING BARS SHALL BE ASTM A615 GRADE 60, ALL COVER SHALL BE 3 INCHES MINIMUM.
5. ALL OPENINGS SHALL BE SEALED WITH ELASTROMETIC GROUT (TYPE 3 CEMENT) SEE DETAIL "A", IN SHEET SD22.

CONCENTRIC PRECAST DRAINAGE MANHOLE (4'-0" MIN. DIA.) DETAIL
NTS

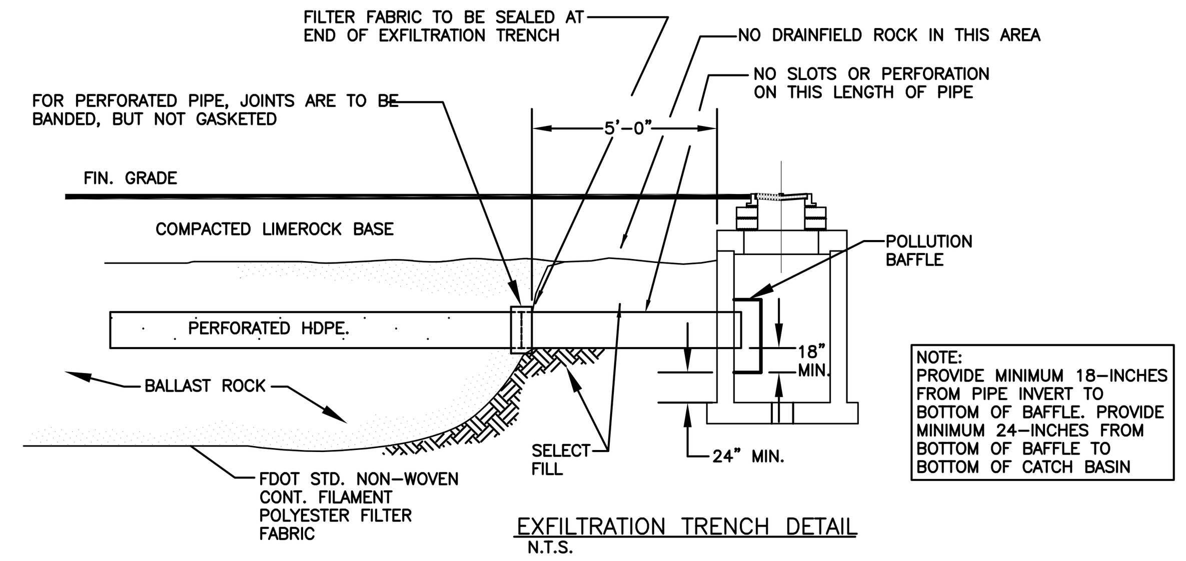

NOTE:
PROVIDE MINIMUM 18-INCHES FROM PIPE INVERT TO BOTTOM OF BAFFLE. PROVIDE MINIMUM 24-INCHES FROM BOTTOM OF BAFFLE TO BOTTOM OF CATCH BASIN

EXFILTRATION TRENCH DETAIL
N.T.S.

WATER TABLE ELEV. = 2.00' NAVD88.

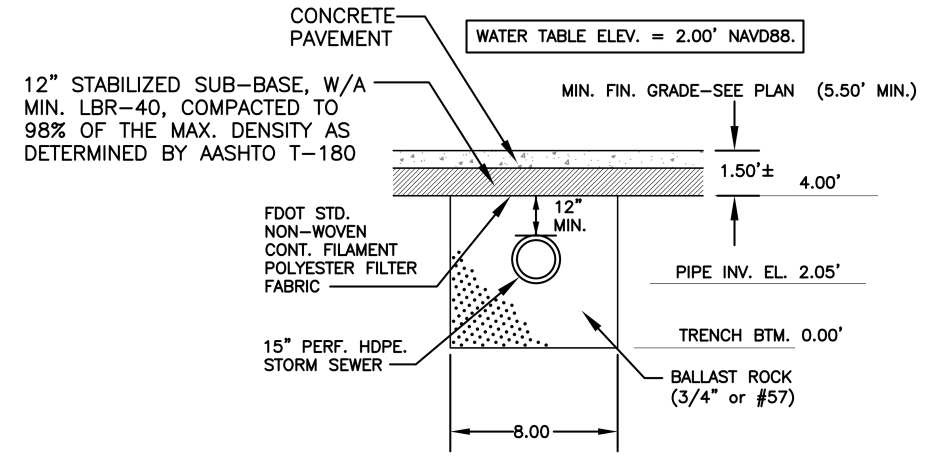

PROPOSED EXFILTR. TRENCH SECTION
N.T.S.

GENERAL NOTES :
1. BAFFLE TO BE SECTION OF CMP CUT IN HALF, CMP PIPE FOR BAFFLE SHALL BE THE NEXT LARGER PIPE SIZE THAN DISCHARGE LINE.
2. 1/2" GALV. LAG BOLT IN LEAD SHIELD (TYP.).
3. WELD, OR 2 1/2" S.S. THRU BOLTS
4. GRATING SHALL BE OFFSET IF STRUCTURE IS USED AS OVERFLOW.

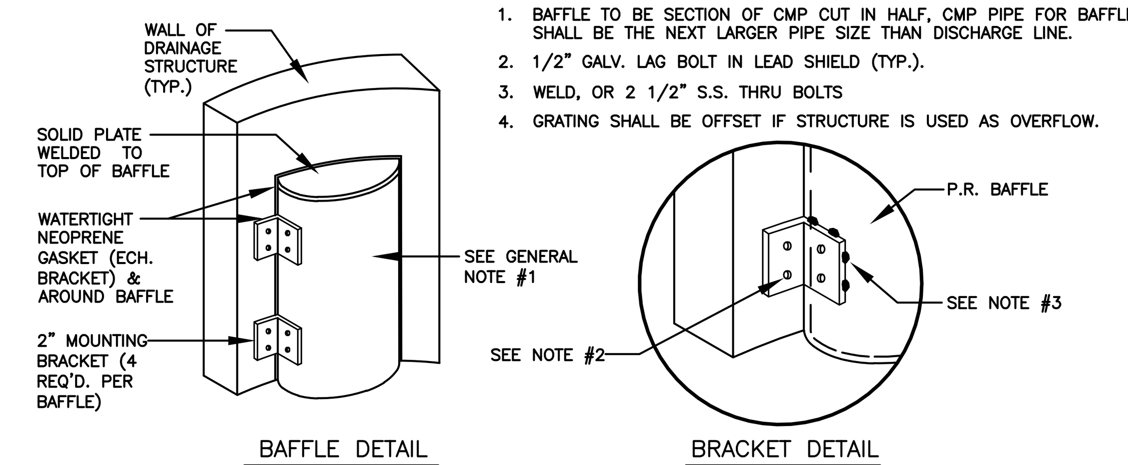

POLLUTION RETARDANT BAFFLE DETAIL
NTS

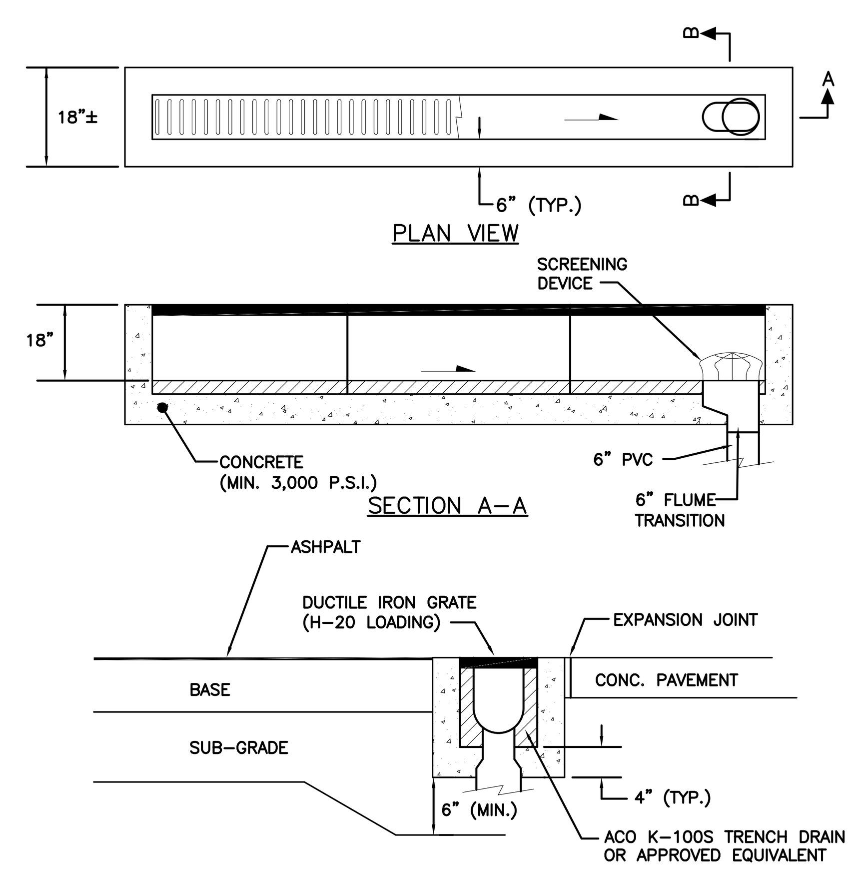

NOTES:
1. SUBGRADE SHALL BE COMPACTED TO 95% MOD. PROCTOR DENSITY (AASHTO T-180)
2. CONNECT TRENCH DRAIN TO OUTFALL PIPE IN ACCORDANCE WITH:

ALTERNATIVE-A: FOR A TERMINAL CONNECTION USE ONE (1) 90° ELBOW.
ALTERNATIVE-B: FOR AN IN-LINE CONNECTION USE ONE (1) 45° ELBOW AND ONE (1) WYE.

TRENCH DRAIN DETAIL
NTS

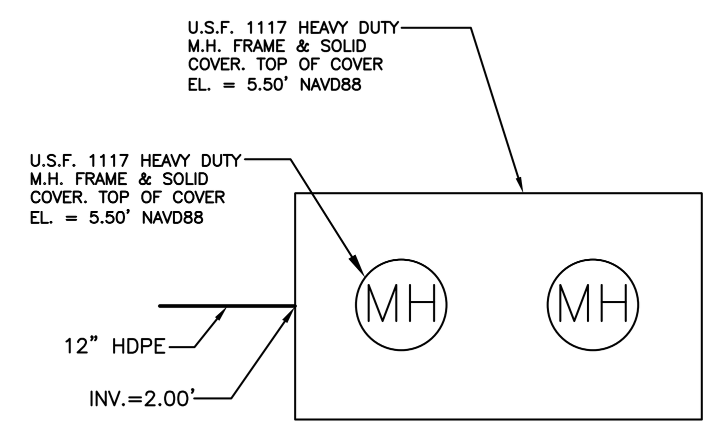

TANK & DRAINAGE WELL PLAN VIEW
N.T.S.

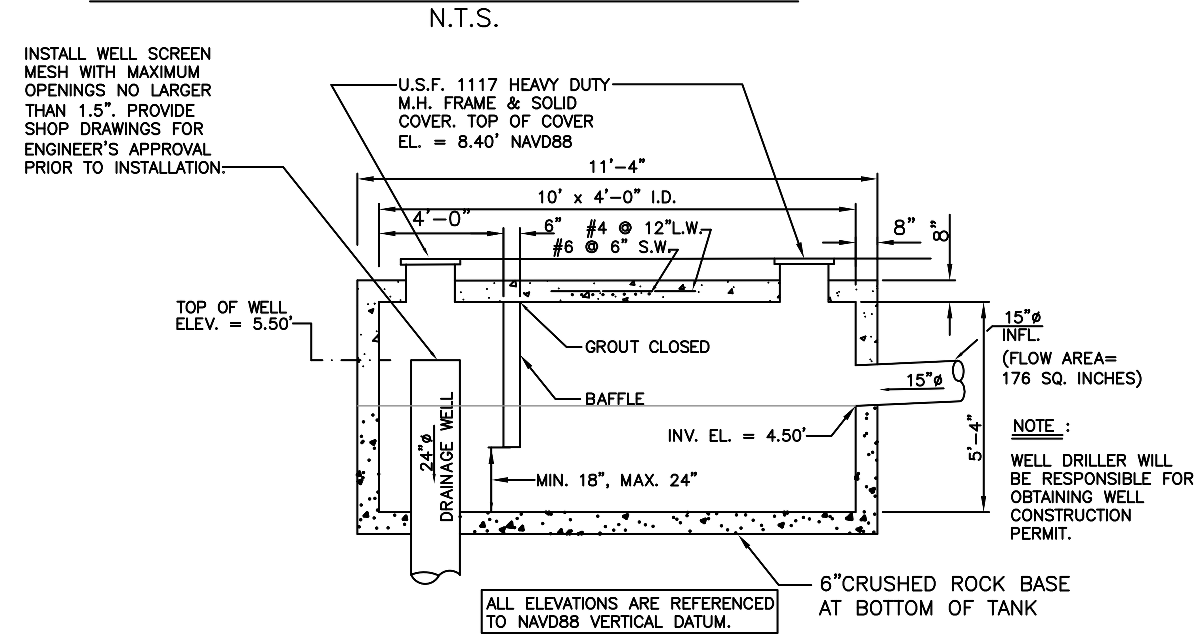

ALL ELEVATIONS ARE REFERENCED TO NAVD88 VERTICAL DATUM.

WELL CAPACITY: 200 GPM

RE-INFORECED CONCRETE RETENTION TANK & DRAINAGE WELL DETAIL
N.T.S.

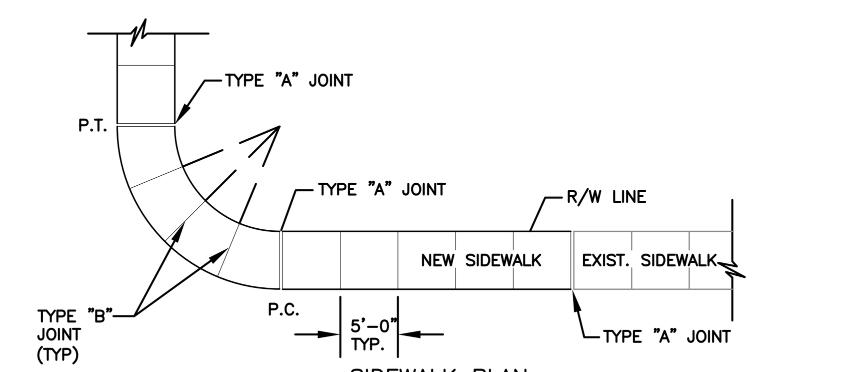

SIDEWALK PLAN
N.T.S.

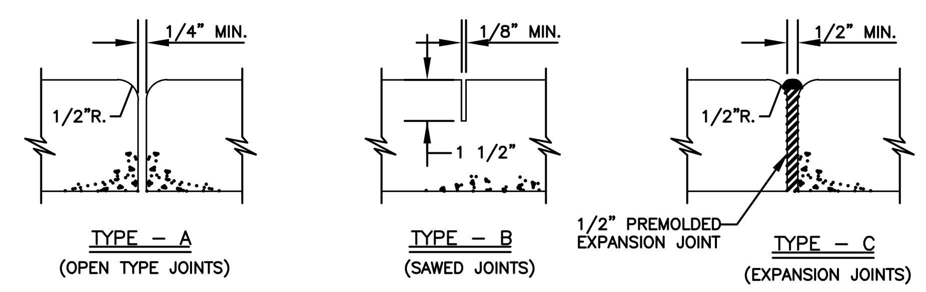

SIDEWALK JOINTS
N.T.S.

TYPICAL SIDEWALK THICKNESS (T)

LOCATION :	"T"
PEDESTRIAN AREAS	4"
DRIVEWAYS & OTHER	6"

NOTES:
1. EXPANSION JOINTS EVERY 50' O.C.
2. CONC. MIN. 2500 PSI, NO STEEL IN SIDEWALK
3. 8" THK. SIDEWALK ACROSS DRIVEWAYS

TABLE OF SIDEWALK JOINTS

TYPE	LOCATION :
"A"	P.C. & P.T. OF CURVES & TIE-IN JUNCTION OF EXIST. TO NEW SIDEWALKS.
"B"	5'-0" O.C. ON SIDEWALKS.
"C"	* WHERE SIDEWALK ABUTS CONC. CURBS & DRIVEWAYS OR SIMILIAR STRUCTURES. EXPANSION JOINTS EVERY 50' O.C.

* INSTALLED AT THE DISCRETION OF THE ENGINEER

SIDEWALK DETAIL
NTS

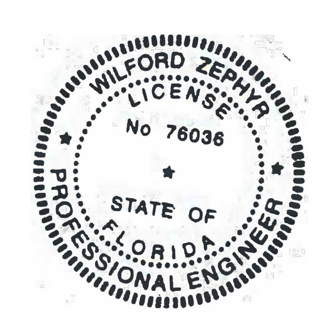

6-28-24

WILFORD ZEPHYR
Digitally signed by WILFORD ZEPHYR
Date: 2024.06.28 13:26:15 -04'00'

THIS ITEM HAS BEEN DIGITALLY SIGNED AND SEALED BY WILFORD ZEPHYR ON THE DATE ADJACENT TO THE SEAL.

PRINTED COPIES OF THIS DOCUMENT ARE NOT CONSIDERED SIGNED AND SEALED AND THE SIGNATURE MUST BE VERIFIED ON ANY ELECTRONIC COPIES.

CIVIL DETAILS
SCALE: N.T.S.

REVISIONS

NO.	DATE	DESCRIPTION

ZEPHYR ENGINEERING
WILFORD ZEPHYR, P.E.
HOLLYWOOD, FL
(786)302-7693
wzephyreng@gmail.com
CA#: 31158

ZE

ECO POMPANO TOWNHOMES
3225 NE 5TH ST
POMPANO BEACH, FL 33062

P.E.#:76036
DATE: 6/16/23
SCALE: N.T.S.
SHEET NO.: CS-3
3 OF
PROJECT NO.: 23-22

DRC
PZ24-12000008
09/18/2025

DRC
PZ24-12000008
01/15/2025